ILD300/122 INDUCTION LOOP DRIVER

AMPETRONIC

www.ampetronic.com

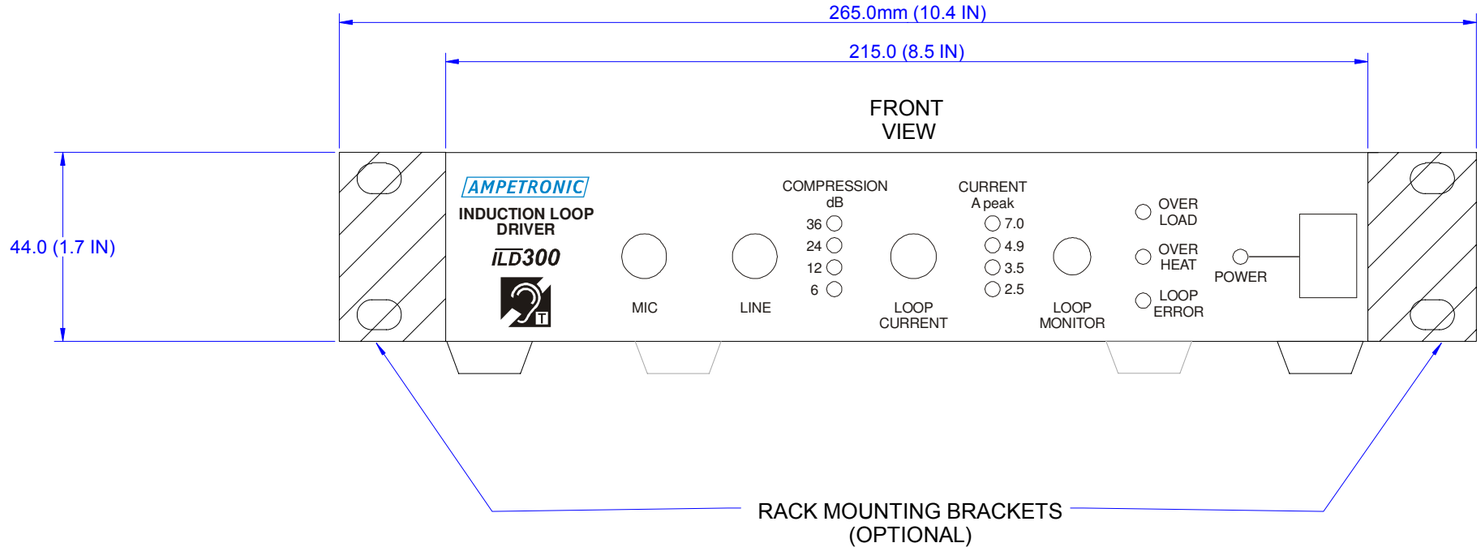

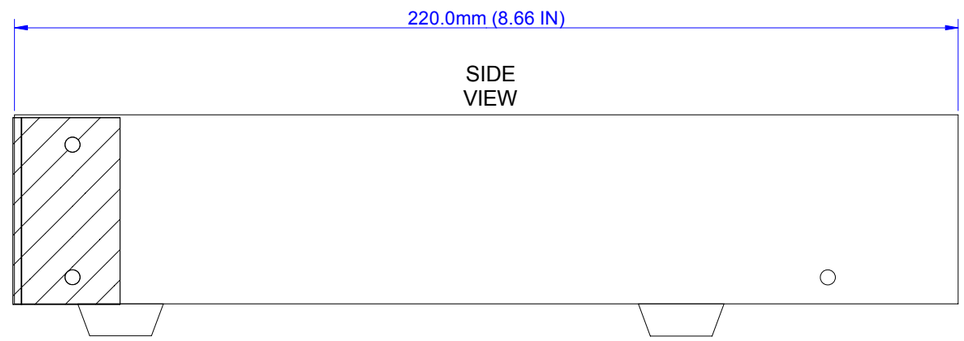

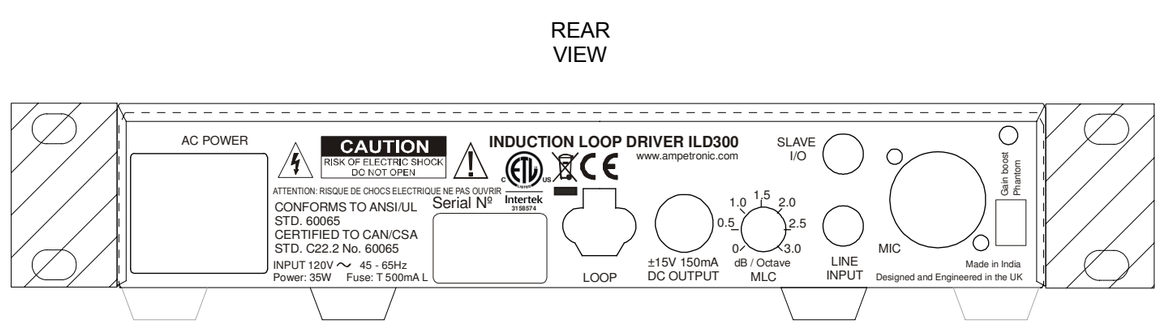

ILD300/122 Outline Drawing UP45503-1