IR T2 - POE KT1 & KT2

POWER OVER ETHERNET WIRING GUIDE

Introduction

The IR T2 is shipped with Williams Sound's TFP 057 (48VDC power supply). The IR T2 is also compatible with the Williams Sound POE 001 Power over Ethernet transformer, and with most POE switches.

Note: The IR T2 is NOT compatible with POE+ power supplies unless they are backwards compatible with POE standards.

Note: We cannot guarantee the audio quality of IR T2 units powered from a third-party POE switch, as they may introduce noise into the system.

POE KT1

This kit should be used for applications using the power supply included with the IR T2 (TFP 057). The kit includes:

- WCA 131
- WCA 133

POE KT2

This kit should be used for applications using POE 001 or a POE Switch. The kit includes:

- WCA 131
- WCA 132

Using POE

POE is provided through a CAT5 or higher cable. Installers should carefully select the grade of CAT5 (or better) cable for the best quality. CAT5 cable provides many advantages:

- Available pre-terminated in various lengths, or terminated on site to the required length
- Available plenum rating, if required
- Available shielded for audio applications

Williams Sound has tested control and balanced audio configurations with up to 300 ft. [91 m.] of CAT5 cable. Environmental interference can limit the length of cable depending on how it is being used. Unbalanced audio setups in excess of 20 ft. [6 m.] of cable are not recommended.

CAT5 cable contains four twisted pairs of wires, two of which are used for POE. Using Williams Sound's passive POE injector kits (POE KT1 or POE KT2) allows the installer to use the remaining two pairs of wire for one of the following three options:

- 1 channel of balanced line level audio
- 1 or 2 channels of unbalanced line level audio
- RS-232 control and monitoring signal

If using 2 channels of balanced line level audio, control/monitoring, and power, POE KT1 or POE KT2 will need to be used along with an additional CAT5 cable. One CAT5 cable will be connected to the POE injector kit and provide power and control, while the other CAT5 cable will provide audio.

Input Diagrams

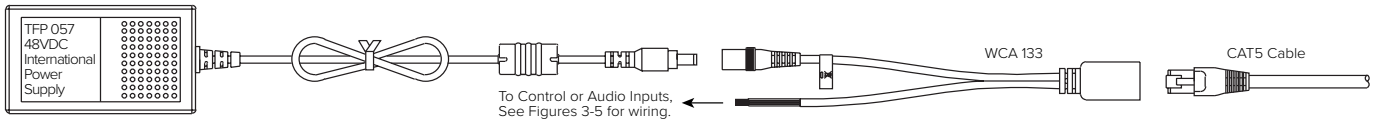

Figure 1: POE Input Setup using WCA 133 Adapter Cable and the TFP 057 power supply.

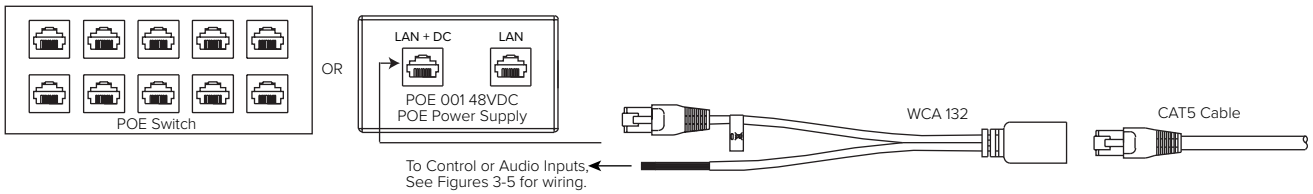

Figure 2: POE Input Setup using WCA 132 Adapter Cable and the POE 001 or a third party POE Switch.

Cabling for Inputs

If using the POE 001 power over Ethernet injector, connect either the RJ-45 plug on the WCA 132 or a CAT5 cable directly to the port labeled LAN + DC (See Figure 2).

Note that the WCA 132 can be plugged directly into the LAN port, which may not leave enough of a cable run to connect to the audio

In all the figures below, check the color coding for the type of CAT5 cable used to determine wire colors if terminating a CAT5 cable.

Input Wiring

Note: The figures below are shown using a WCA 133, but a WCA 132 can be used with the same wiring. In some cables, the yellow wire may be colored green.

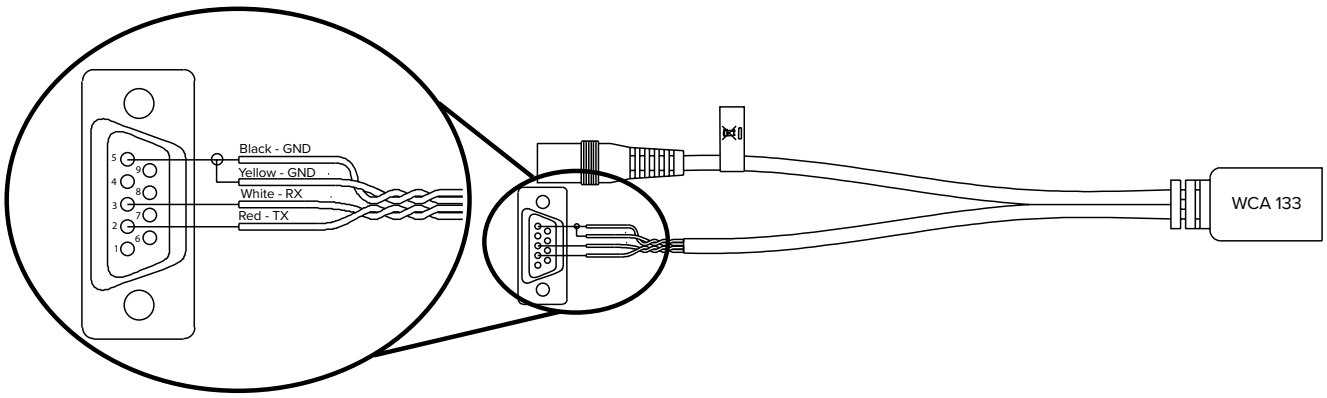

Figure 3: RS-232 Control Input

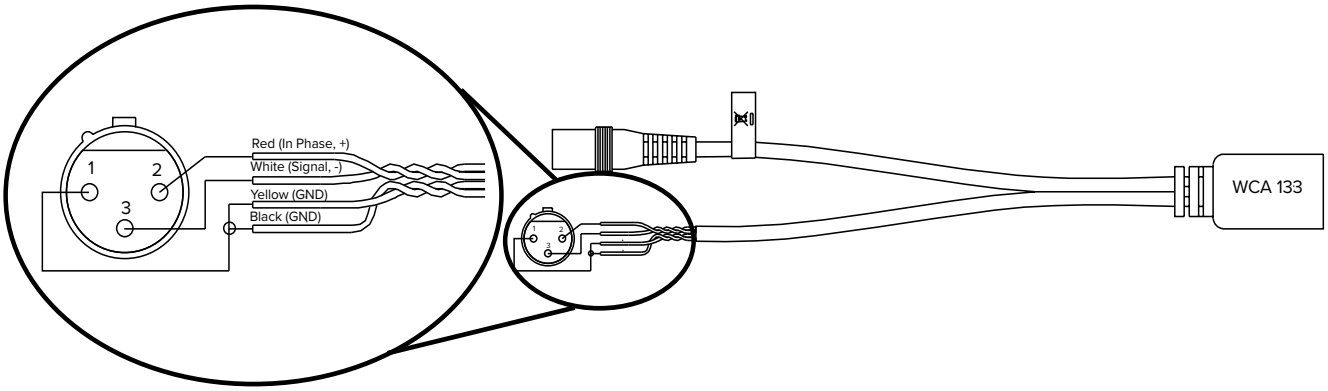

Figure 4: Balanced Line Level Audio for Input

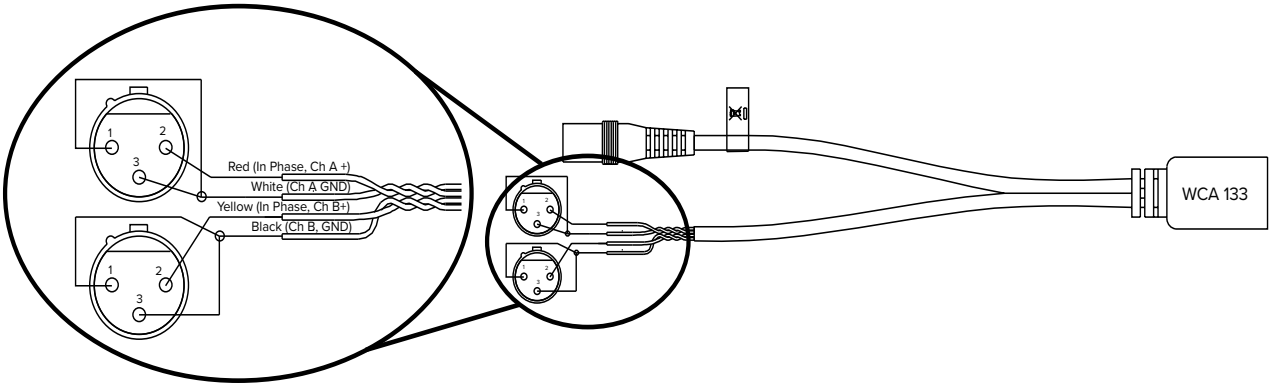

Figure 5: Unbalanced Line Level Audio for Input

Output Diagrams

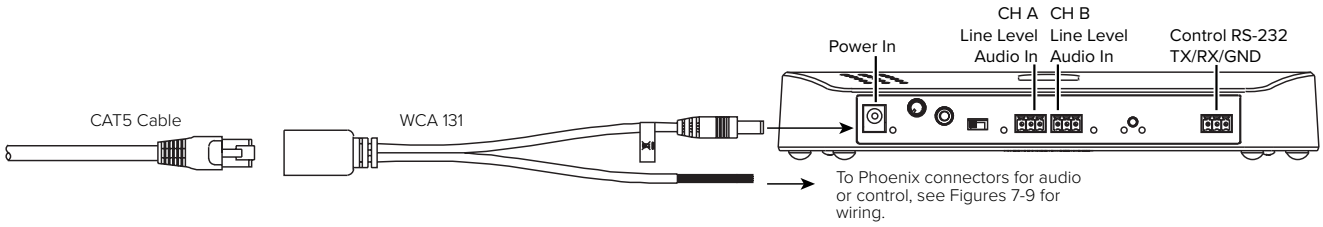

Figure 6: POE Output Setup using a WCA 131 Adapter Cable and the IR T2 back panel.

Output Wiring

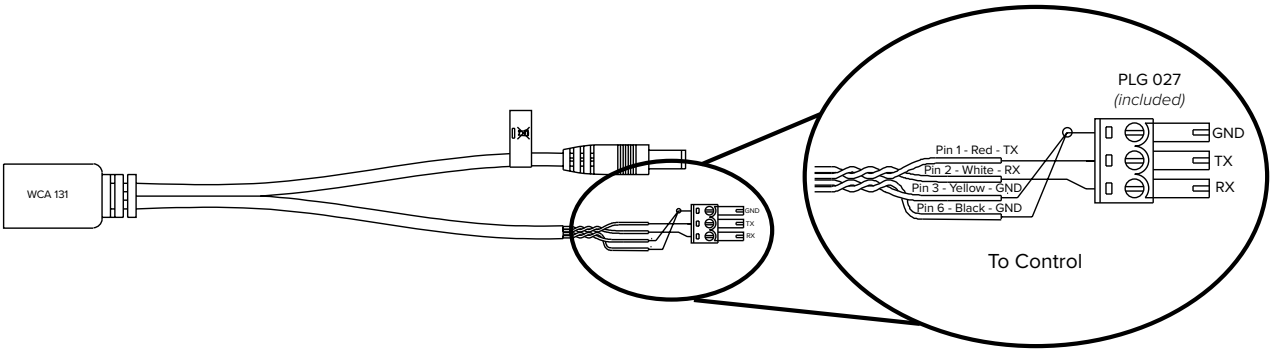

Figure 7: RS-232 Control Output

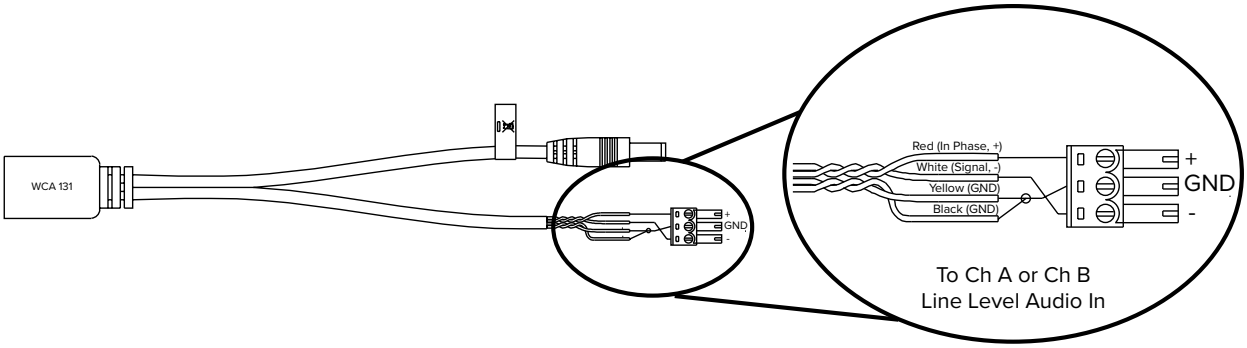

Figure 8: Balanced Line Level Audio Output

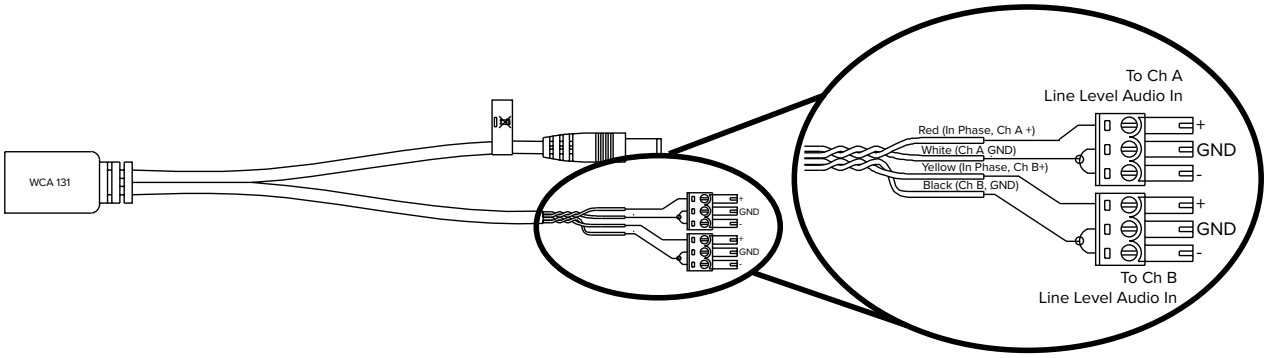

Figure 9: Unbalanced Line Level Audio Output

Connecting Audio, Power and Control

Providing power, audio and control options simultaneously requires two CAT5 cable runs. To run the power and control, you will need either the POE KT1 or POE KT2, depending on how you wish to power the device.

If you are using the provided power supply (TFP 057), connect the power to a WCA 133 from POE KT1.
If you are using POE switch or power supply, connect the power to a WCA 132 from POE KT2.

When powering the IR T2, connect the WCA 131 to the CAT5 cable with the powered WCA 132 or WCA 133. Connect the WCA 131 to the Power In and Control inputs on the IR T2.

Run a separate CAT5 (or higher) cable connected to a balanced audio source on one end. Connect the other end to the IR T2 following the wiring diagram below.

Refer to the wiring diagrams throughout this document for your specific configuration needs.

Power and Control Setup

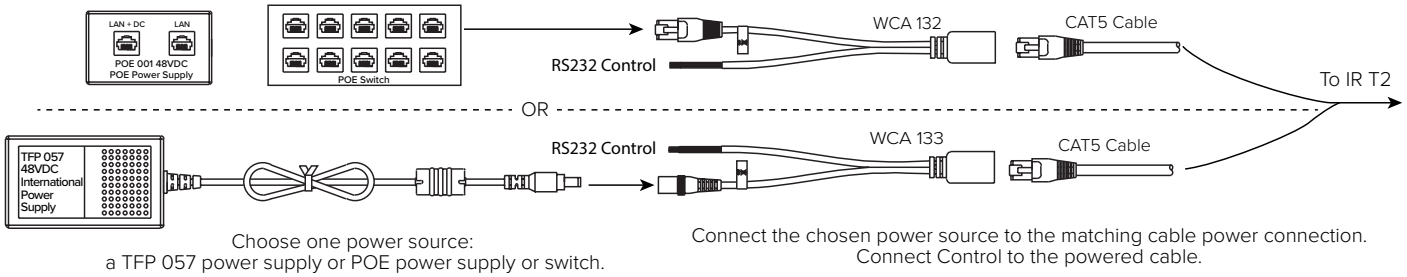

Choose one power source:
a TFP 057 power supply or POE power supply or switch.

Connect the chosen power source to the matching cable power connection.
Connect Control to the powered cable.

Connections to the IR T2 Two CAT5 cables need to be run to the IR T2

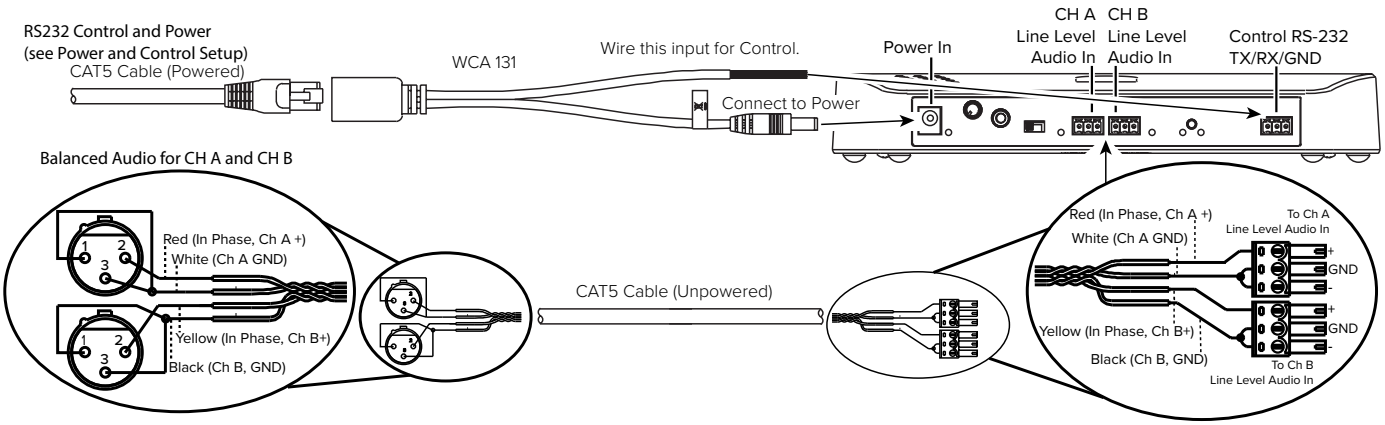

Note: Use of this product with power supplies not provided by the manufacturer voids the warranty of the product (see IR T2 user guide [MAN 217] for further details about warranty coverage).

For additional technical support, please contact TechBlue by calling +1-800-328-6190 or visit www.williamsav.com.

WILLIAMSAV
info@williamsav.com / www.williamsav.com
800-843-3544 / INTL: +1-952-943-2252

© 2018, Williams AV, LLC TCH 033D